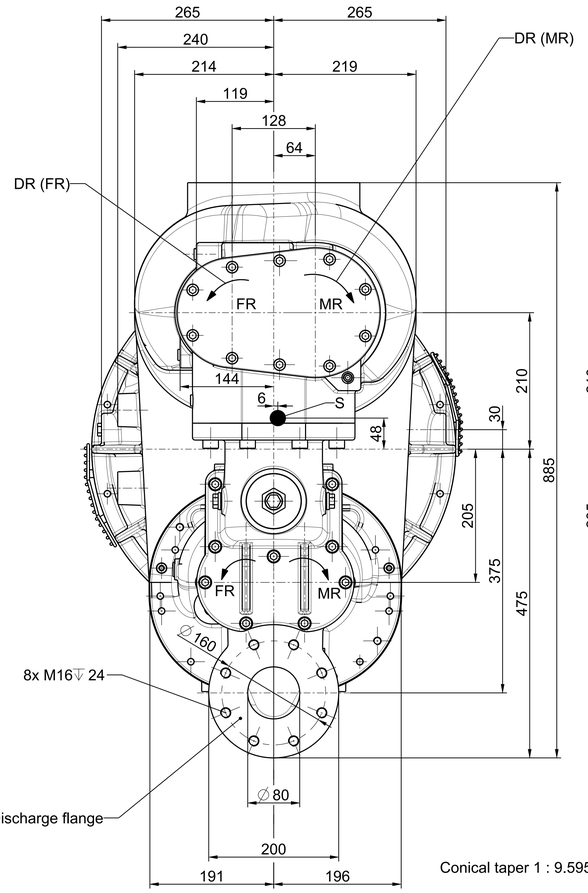

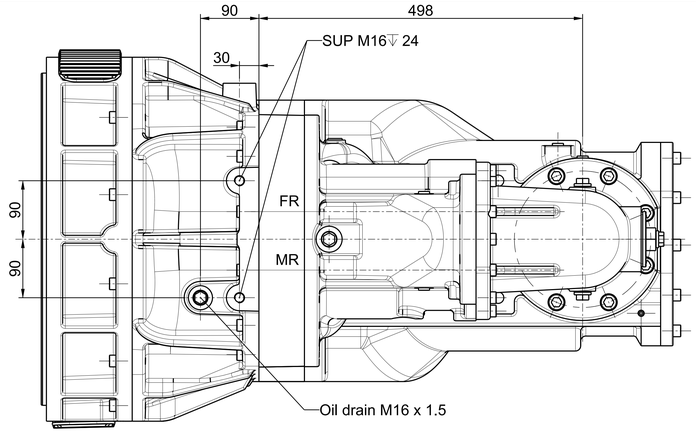

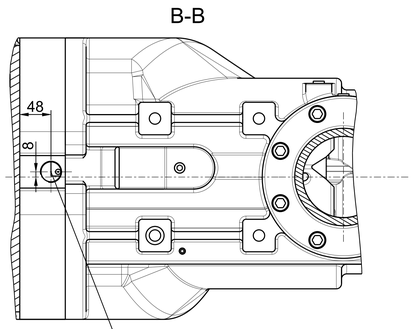

Abbreviations	
MR	Male rotor
FR	Female rotor
DR	Direction of rotation
S	Center of gravity
DO	Opening for diagnosis
X	Positions for vibration measurements
SUP	Threaded connections (can be used for additional support)

(A) (B) (C) (D) (E) (F) (K) Ports for oil system (Referenced in manual / piping diagram)

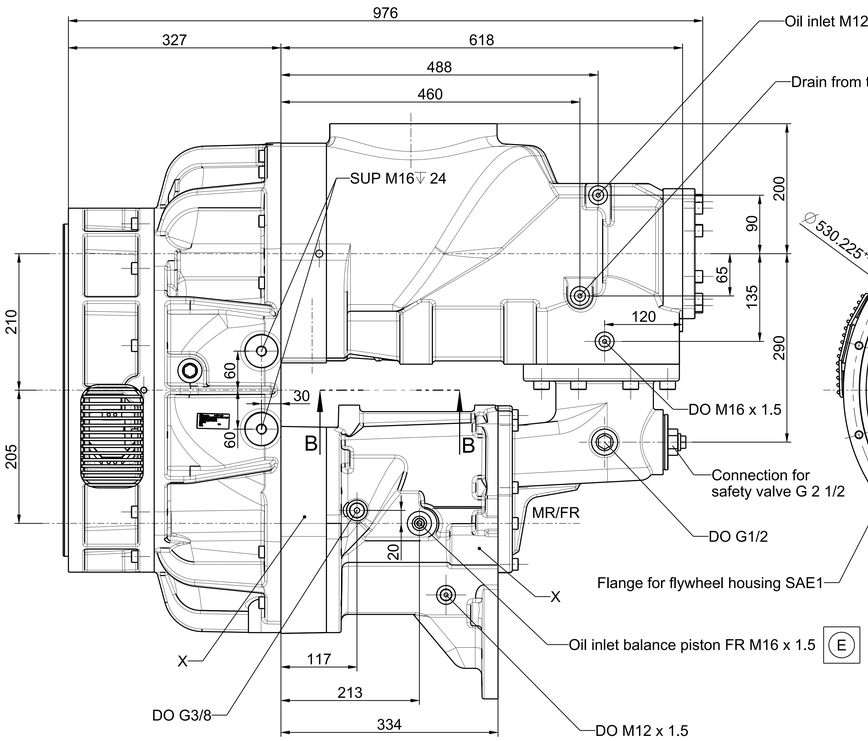

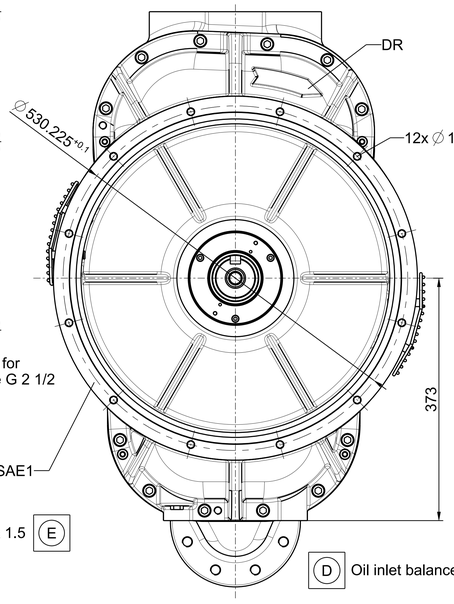

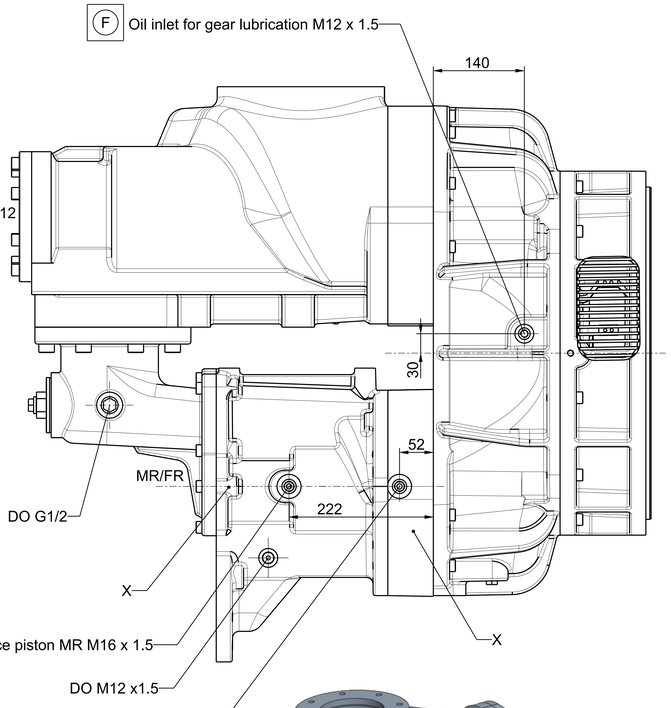

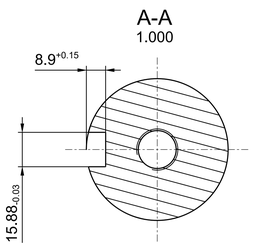

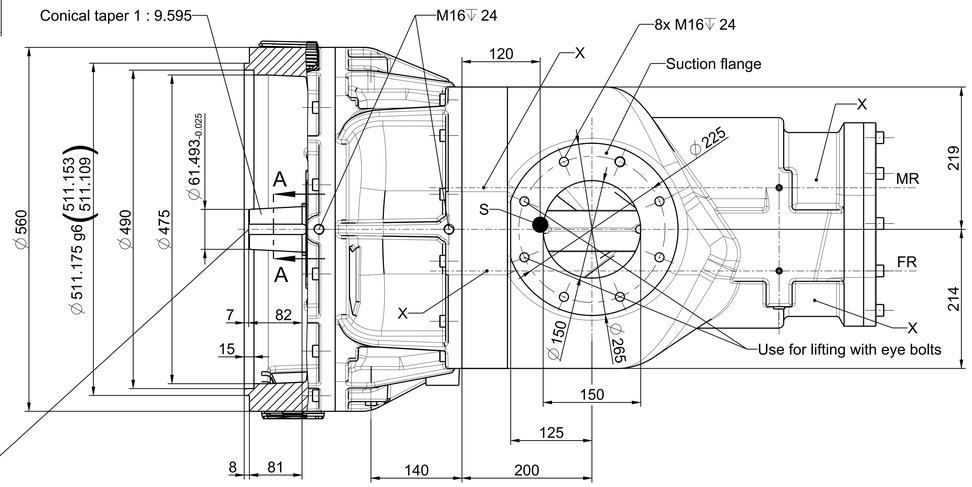

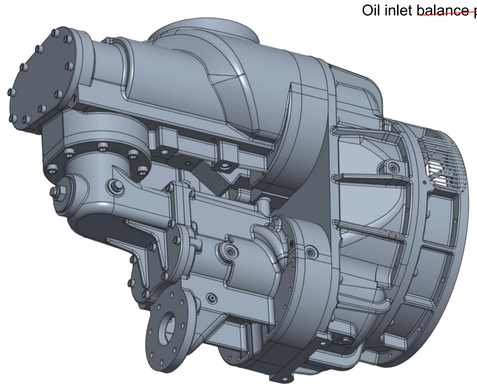

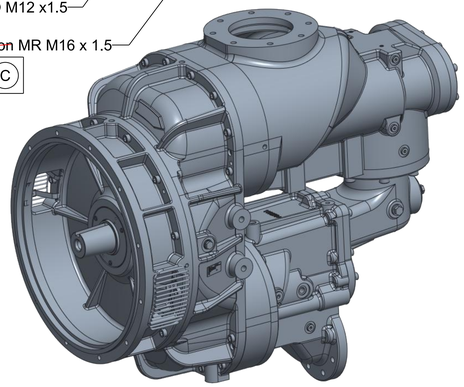

Match WC name to part name

C-21-142 ECN 1459357	C		Complete overhaul of the drawing. (No physical changes of comressor stage)		28.03.2022	M.Besseling / M.Pradeep
Change Ref.	Rev.	Qty.	Description of change		Date	Created / Checked
CAD drawing	DIN A0			Material	(curr.Rev.)	
				Pattern No.	(curr.Rev.)	
			Type CF1000H	Weight (kg) 656	Scale 0.300	

Ingersoll Rand.

Installation Drawing Compressor Stage

			Technical CCN	Drawing No.	Revision	Sheet
2012	Day	Name	24285124	24285124	C	1 of 1
Created	28.10.	Thamm				
Checked	29.10.	Wels				
			Made from 400-1-043623			

The reproduction, distribution and utilization of this drawing as well as the communication of its contents to others without explicit authorization is prohibited. Offenders will be held liable for the payment of damages. All rights reserved in the event of the grant of a patent, utility model or design.